Vossloh Kiepe GmbH

vossloh
Electrical Systems

Emergency Brake Switch

Kiepe NBS 550

Description

The passengers can trigger an emergency braking by activating the Kiepe NBS 550 Emergency Brake Switch.

While pulling the handle – after a pressure point has been passed after which the passenger has no longer any influence – the emergency braking occurs. The contacts have positive opening at the same time as the locking.

The unlocking can be carried out via a socket wrench[1] or safety key[1] depending on the model. The pulled handle is reset via spring tension during the unlocking.

The handle of the Kiepe NBS 550 is situated in a depression. The emergency brake switch is to be flush-mounted if the installation is deep enough (approx. 80 mm).

Lead sealing is possible.

For this model, inscription is only possible via separate labelling[1] close to the visible handle.

[1] Not included in delivery

Technical Data

Type	Kiepe NBS 550
Rated insulation voltage	DC 110 V +25/-30%
Ambient temperature	-25° C ... +70° C
Protection type	IP 00
Unlocking [1]	Square bolt / closing cylinder
Contacts	2 NO 2 NC
Thermal current	10 A
Rated switching capacity (24 V / 110 V) [2]	8 A/0,4 A
Connection	Faston plug 6.3 mm
Weight approx.	1.3 kg
Colour[1] (housing / handle)	NCS 4005 R 80 B (grey) / RAL 0204050 (red)
Operating force approx.	80 N (without lead sealing)
Actuating height approx.	10 mm

[1] To be specified when ordering
[2] Inductive load

Dimensions

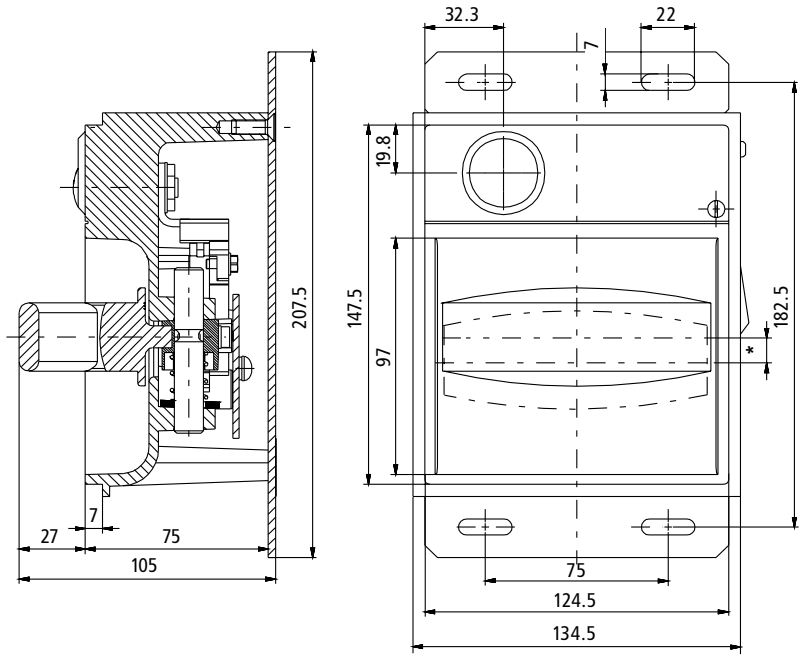

* Total travel: 10 mm

Vossloh Kiepe GmbH
Kiepe-Platz 1 • 40599 Düsseldorf, Germany
Phone: +49(0)211/7497-0
Fax: +49(0)211/7497-300
info@vkd.vossloh.com
www.vossloh-kiepe.com

Subject to change without notice.

578/1–07/08